DTG OR9 OPEN FRONT MULTIDECK

cossiga



- Stainless steel construction
- Four adjustable shelves
- Ticket strips on shelves
- Shelf mounted air curtains
- Under shelf and canopy LED lights
- Pull down night blind
- Forced air circulation
- Integral condenser
- Removable front grille panel
- Roll in on castors
- Climate class M1
- Hinged front doors - **optional**



3M1 TEMPERATURE CLASS -1°C to +5°C

CC3 CLIMATE CLASS 3 25°C ambient and 60%RH

Shown with optional frame less hinged acrylic front doors

sold as accessory kit

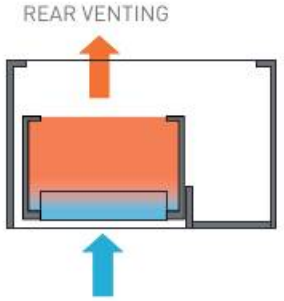

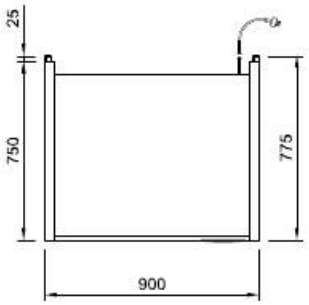

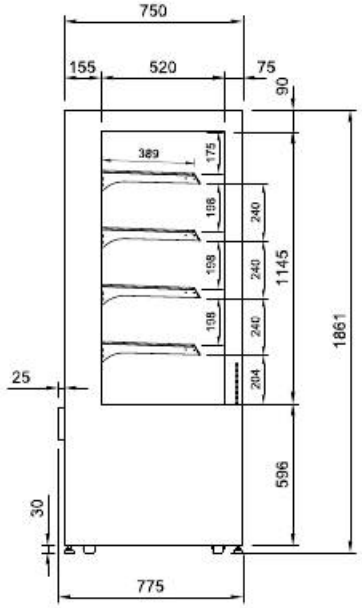

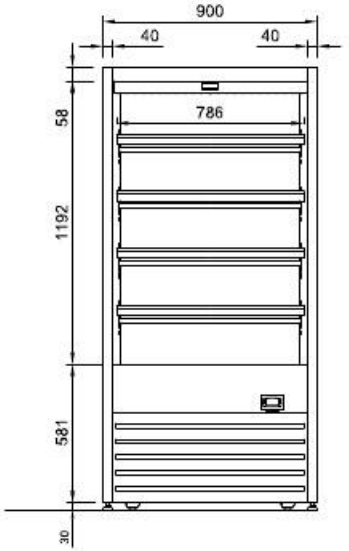

Drainage System Options

- Electronic evaporation pan - AS STANDARD
- Pump to waste - OPTIONAL

CABINET DIMENSIONS & SPECIFICATIONS

Prior to installation see, installation guidelines, ventilation requirements and drainage options documents

MODEL	CABINET				SHELVING	OPERATING TEMP	SHELF	BASE TRAY	DISPLAY	REFRIGERANT	FREQUENCY	OPERATING CURRENT	POWER	CONNECTION ELECTRICAL POWER CORD 2200MM		VOLTAGE	PACKED FOR SHIPPING			
	LENGTH [MM]	DEPTH [MM]	HEIGHT [MM]	WEIGHT [KG]		DEG C	W X D	W X D	M^2	TEMP CLASS M1	Hz	Amps	Kw	NZ/AUS 10 AMP	UK 13 AMP	Volts	LENGTH [MM]	DEPTH [MM]	HEIGHT [MM]	WEIGHT [KG]
DTGOR9	900	775	1860	209	4 + BASE	-1 +5	786 X 386	820x 453	1.63	R290	50 Hz	5.8	1.21	3 PIN PLUG	3 PIN PLUG	220-240V	1000	830	2030	219

Maximum shelf load weight 15kg spread evenly

Date Modified: 21/10/26 Check website for latest version

AutoCAD Revit SketchUp

Download or contact us on COSSIGA.COM