CookRite

TO COOK NICELY!

AT80G4B-O / AT80G6B-O
AT80G8B-O

CATER TO MORE CUSTOMERS
4, 6 & 8 BURNER OPTIONS WITH OVEN

FEATURES

- *Constructed in 304 stainless steel front back and sides*
- *Stainless kick plate including back guard and high shelf*
- *Heavy duty constructed frame*
- *Tall stainless steel splash back*
- *Standard flame failure*
- *Heavy duty burners with a stable flame and standby pilots*
- *Stainless steel tubing for burners and pilots*
- *Easy to use temperature controls*
- *Heavy duty cast iron trivets*
- *Heavy duty rear castors*
- *Oven pilot with 100% safety shut off*
- *Oven temperature control range*
- *100 ~ 300 degrees celsius*
- *Manual ignition*
- *Piezo ignitors on oven only*
- *Adjustable stainless steel legs*
- *3/4 inch gas inlet*
- *Multiple position oven rack guides*
- *Comes with one chrome rack per oven*
- *Static oven*
- *Stainless steel legs*
- *Available in NG and LPG*
- *300mm W Drop on Griddle Plate available as an optional GRID 30 $374.00*
- *ATO-4B-F,ATO-6B-F Comes with 1 wired shelves*
- *ATO-8B-F Comes with 2 wired shelves*
- *Shelves RRP $102.00 each*

4 Burner with Oven

AT80G4B-O

6 Burner with Oven

AT80G6B-O

8 Burner with Oven

AT80G8B-O

* All prices are EX-GST

AT80G4B-O

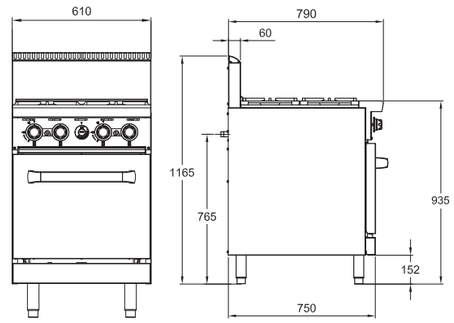

INFORMATION	AT80G4B-O
Gas Type	NG/LPG
Gas Output Mj/h	Per burner: 28 / Oven: 26
Total Power Output Mj/h	Per burners: 112 / Oven: 26
Dimensions(mm)	W600 x D800 x H1115, 130kg
Packaging Dimensions(mm)	W685 x D995 x H1025, 176kg
RRP	***$4,709.00***

AT80G6B-O

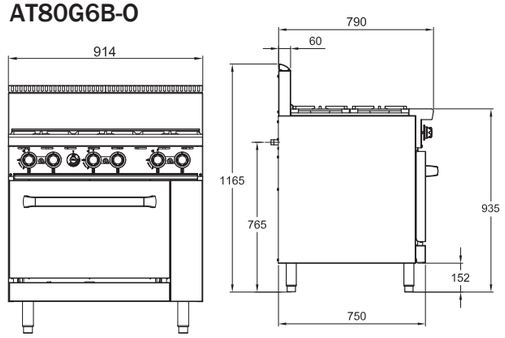

INFORMATION	AT80G6B-O
Gas Type	NG/LPG
Gas Output Mj/h	Per burner: 28 / Oven: 29
Total Power Output Mj/h	Per burners: 168 / Oven: 29
Dimensions(mm)	W900 x D800 x H1115, 174kg
Packaging Dimensions(mm)	W985 x D995 x H1025, 232.5kg
RRP	***$5,744.00***

AT80G8B-O

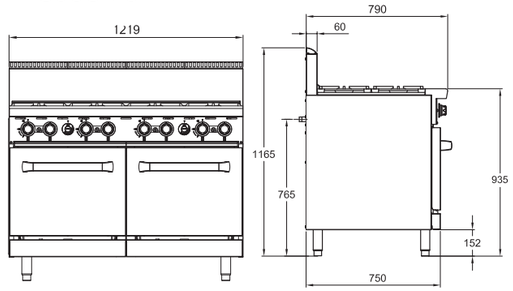

INFORMATION	AT80G8B-O
Gas Type	NG/LPG
Gas Output Mj/h	Per burner: 28 / Oven: 26
Total Power Output Mj/h	Per burners: 224 / Oven: 52
Dimensions(mm)	W1200 x D800 x H1115, 242kg
Packaging Dimensions(mm)	W1285 x D995 x H1025, 307.3kg
RRP	***$8,734.00***

AUSTRALIA AND NEW ZEALAND GAS SAFETY CERTIFICATION

2 YEARS WARRANTY ON ALL PARTS & LABOUR
EXTRA 2 YEARS WARRANTY ON PARTS WHEN YOU REGISTER WITH US ONLINE

* All prices are EX-GST